MODEL LT 1050
HARNESS NUMBER (629-04139)

CUBCADETPARTSNMORE.COM
515-266-7944

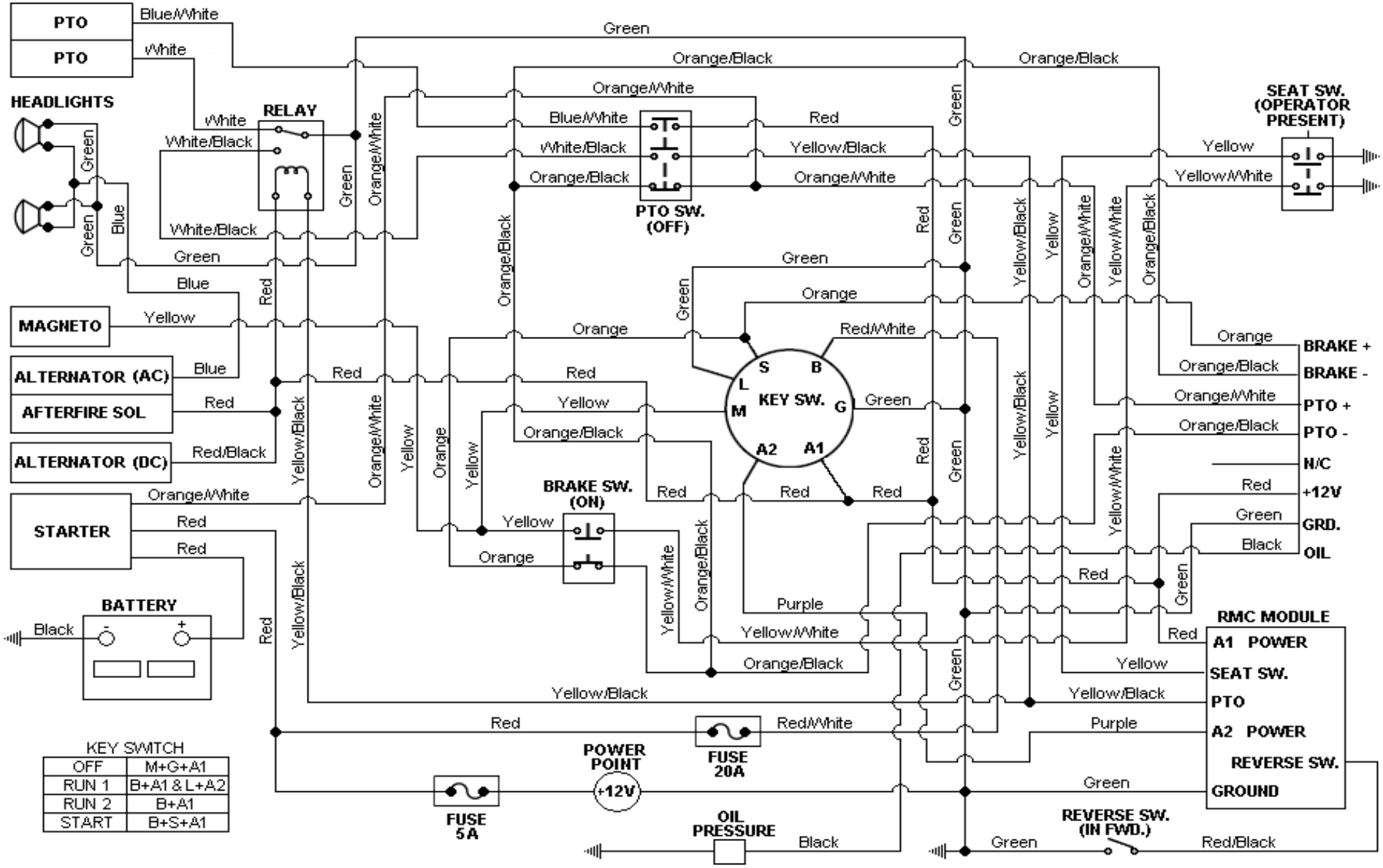

KEY SWITCH

OFF	M+G+A1
RUN 1	B+A1 & L+A2
RUN 2	B+A1
START	B+S+A1